2017

360 Sprints

Official Rules and Regulations

DISCLAIMER: *"The rules and/or regulations set forth herein are designed to provide for the orderly conduct of racing events and to establish minimum acceptable requirements for the orderly conduct of racing events within the 360 Sprint Car Division at Ohsweken Speedway. These rules shall govern the condition of all events, and by participating in these events, all participants are deemed to have complied with these rules.* ***NO EXPRESSED OR IMPLIED WARRANTY OF SAFETY SHALL RESULT FROM PUBLICATION OF OR THE COMPLIANCE WITH THESE RULES AND/OR REGULATIONS****. They are intended as a guide for the conduct of the sport and are in no way a guarantee against injury or death to a participant, spectator, or official.*

The Technical Inspector (s) or Director of Racing Operations shall be empowered to permit reasonable and appropriate deviation from any of these specifications herein or impose any further restrictions that in his / her opinion do not alter the minimum acceptable requirements. ***NO EXPRESSED OR IMPLIED WARRENTY OF SAFETY SHALL RESULT FROM SUCH ALTERATION OF SPECIFICATIONS.*** *Any interpretation or deviation of these rules is left to the discretion of the Director of Racing Operations or his / her appointee. Their decision is final."*

It is the responsibility of each competitor to read, understand and comply with these rules as written. They are neither foolproof nor exhaustive. They are intended to provide fair and competitive racing for all who participate in this division. The spirit and intent of these rules is the standard that will be used for competition at Ohsweken Speedway. Ohsweken Speedway officials are authorized to decide if an equipment change or addition is an attempt to circumvent these rules or provide an unfair advantage. OS officials can and will disqualify any entry in violation of the spirit and intent of these rules. Decisions will be based on common sense, consistency, impartiality and fairness. If there is disagreement or dispute regarding the meaning, interpretation, or application of these rules, OS officials' decisions shall prevail. If these rules do not specifically say that you can add, change, or modify something, then you should consider that addition, change or modification illegal. Any questions about the legality of an addition or modification not covered by these rules must be answered by OS officials in writing, and their decision is final.

Ohsweken Speedway reserves the right to alter or amend these rules at any time in the interests of safety, cost control or fair competition. The safety of each racecar and all equipment is the complete responsibility of the driver/owner, and the driver/owner acknowledges this responsibility by participating in any racing activity at Ohsweken Speedway.

Ohsweken Speedway

1.0 General:

1.1- Drivers must be 14 years of age. Under 18 years of age, an insurance document *(parental consent form)* must be signed by both parents and/or legal guardians and filed with Ohsweken Speedway.

1.2 - Drivers will have one half hour to collect their nightly pay after all technical inspections are completed.

1.3 - Drivers are considered as an independent contractor and as such are responsible for all charges and taxes on any funds received from Ohsweken Speedway.

1.4 - Drivers or their crews will not consume alcoholic beverages at any time prior to or during an event. Use, sale, or distribution of illegal drugs at any time shall be cause for immediate and indefinite suspension. Participation by a team member in either activity will result in disqualification with all points and earnings toward the year end point fund being forfeited.

1.5 - Rough driving and verbal abuse or inappropriate behaviour by any member or perceived member of a team will not be tolerated. No further warning will be given. If a driver or team member is deemed to have committed inappropriate behaviour, the team may be disqualified. If disqualification is imposed for the incident, monies won along with any and all points will be rescinded for the night and a one (1) week suspension will be imposed for the first offence. A subsequent offence will result in suspension for the remainder of the year.

1.6 - The driver is the sole spokesperson for the race team and is responsible for their actions.

1.7 - Striking an official will result in disqualification for the evening, forfeiture of all points and monies for that evening, automatic one week suspension, and up to a one year suspension upon review.

1.8 - Other penalties may be levied dependant on the severity of the situation.

1.9 - Any driver stopping on the race track to protest will be disqualified for the remainder of the evening, scored last in that event, and forfeit all points and monies earned for the evening.

1.10 - The driver or a representative must attend the evening drivers meeting or start scratch for their heat race. Roll call may be used at any time.

1.11 - Failure to pass post-race technical inspection will result in loss of all feature points for the evening. (A second failure to pass technical inspection during the season will result in loss of all accumulated championship points to date.)

1.12 – Helmets are recommended to be worn anytime the racecar is in motion.

2.0 Alternates:

- 2.1 – No Alternates will be used at Ohsweken Speedway to complete a full field. If one or more qualified cars cannot start the feature event, no non-qualified cars will be used to fill those spots

3.0 Driver Changes:

- 3.1 - Car and driver qualify as a team. Each driver may qualify only one car. Drivers will be permitted to change cars after taking the green flag of his/her qualifying heat race provided:
- 3.1.1 – The car is scratched if already qualified through a heat race;
- 3.1.2 – A qualifying event (“B” Main) remains on the program;
- 3.1.3 – They start scratch in the qualifying event.
- 3.1.4 – If no “B” Main is required and a position remains open in the “A” Main
- (24 Cars Maximum) they may start scratch in the “A” Main.
- 3.1.5 – Motor changes will be allowed but the car must start scratch in any further events in the evening until qualified (requalify) for “A” Main.

4.0 Qualifying Procedures:

- 4.1 – No Time Trials for Regular Events will be run. ALL drivers are to report to the registrar immediately upon arrival at the speedway to draw their pill for positioning in the qualifying events. Line-ups will be posted 15 minutes prior to Hot Laps. Anyone not drawing before line-ups are posted will be placed at the back of the heat races.

5.0 Racing:

- 5.1 - You are allowed only one push off per race. If you require a second push off, you will go to the tail. After drivers have been called to line up for a race, all drivers must be ready for push off *with their group* or will start at the tail of their race. *If not ready for push off when the last car running in their group enters the race track, they will not be*

allowed to start. If belts come loose, driver must stop by an official to buckle up and will not be penalized. Rows will move straight up to fill voids in the scheduled line up caused by cars scratching or failing to show.

- **5.1.1 - Yellow flag:**

- 5.1.1.1 - All cars that stop on the racetrack or spin bringing out a yellow will go to the tail.
- 5.1.1.2 - During yellow, no working on the car is allowed on the track or the car will be disqualified for that event.
- 5.1.1.3 - Cars upon stopping on the race track twice (2) during heat races or twice (2) during the “B” or “A” Main causing and/or being involved in an incident where a yellow or red flag needs to be displayed will be disqualified from that race at that time.
- 5.1.1.4 - First lap restarts; inside or outside row will move straight up to fill a void for a missing car.
- 5.1.1.5 - Any car that does a 360 spin and does not bring out a yellow flag will continue to race where it falls in line. If the yellow does come out, the car will be placed at the tail of the field and be charged with a yellow. The track flag person will determine if a yellow flag is needed and will have final say to what any yellow flag was displayed for.
- 5.1.1.6 - A yellow flag will be displayed for any debris deemed to be in the racing groove and a danger to the competitors. Any car that can be identified as causing a yellow flag for depositing the debris will be charged with the yellow and placed at the tail of the field.
- 5.1.1.7 - The track flag person in conjunction with the Race Director will determine if a yellow flag is needed and will have final say to what any yellow flag was displayed for. If the one-way radio communication is provided by approved track personnel other than the On Race Director, they should not initiate the call for yellow (or red) until directed.
- 5.1.1.8 - During all yellow flag situations, cars must get single file and pack the top of the track if conditions allow so.

- **5.1.2 - Red flag:**

Do not pass the crash site. Pull to the topside of the track and stop immediately.

- 5.1.2.1 – “CLOSED” red flags only. On a closed red, crewmembers will not be allowed on racing surface unless directed to do so by the Race Director. No work is allowed at any time on the racing surface by any team.
- 5.1.2.2 – During “B” & “A” Main action, Any car wishing to make repairs may advance to the PIT prior to the yellow flag being displayed provided they DO NOT have to go through the accident scene and then only after they are given permission to do so by the Race Director and only at his discretion.
- 5.1.2.3 – The work area 2 minute timer will begin once the track goes back to yellow flag condition.

- 5.1.2.4 – Violation of red flag procedures will result in disqualification for the evening and FORFEITURE OF ANY POINTS and MONIES EARNED. No red flag will be displayed for a fuel stop.

- **5.1.3 - Black flag:**

- If the Black Flag is waved for you it means you are disqualified from that race and must return to the pit immediately *(or infield clear of the racing surface)*. Scoring will stop for you. Failure to leave the track will result in disqualification from all remaining races for the evening and *all points and monies* for that evening will be forfeited.

- **5.1.4 - Starts**:

- 5.1.4.1 – Starts will be at the white line in turn four for all cars. Pole sitter sets a moderate steady pace. Race starts when the front row reaches the white line. ALL cars must be in a tight nose to tail formation in their original starting lineup position.
- 5.1.4.2 – Once the green flag is displayed racing begins immediately.
- 5.1.4.3 – A *yellow flag will be displayed for either car on the front row passing before the start of the race.* ***(Passing is defined as being clear of the car beside you)****. The car that causes the yellow will be charged with the yellow and will be moved back one row in their line for the double file restart*.
- 5.1.4.4 – All other cars in rows two and beyond will be charged with a jump start if they are out of line, leave an excessive amount of room between themselves and the car directly ahead of them, or pass before the white line as they start the race. No yellow flag will be displayed for these violations and two positions per car passed penalty will be assessed at the first caution (or red flag period) or if neither instance occurs the penalty will be assessed at the conclusion of the race.

"NO WARNING WILL BE GIVEN FOR FALSE STARTS"

- **5.1.5 - Lining up for Restarts:**

- Form a single line, nose to tail. Officials will correct the line-up when received from the scorers. Lapped cars must hold their positions in all races.
    - 5.1.5.1 – **Lapped cars will be placed at the rear of the field for "A" Main only when a yellow or red is displayed with 5 or less laps remaining. Lapped cars will be lined up in their running order. All other races lapped cars must hold their running position.**

- **5.1.6 - Restarts:**

- 5.1.6.1 – ALL restarting line-ups will be single file after one complete lap with lapped cars being placed in their running order in the line-up.
- 5.1.6.2 – ALL restarts will be at the cone.
- 5.1.6.3 – Cars must pass between cone and outside barrier of track. Leader of race has option to start acceleration in the designated restart area.
- 5.1.6.4 – No passing before the cone, driving below or hitting the cone. Any car in violation will be charged with two positions per car passed, or two positions for hitting or driving under cone.
- *5.1.6.5 – These penalties will be assessed at the next yellow or red or at the end of the race if further slowdown does not occur*.
- 5.1.6.6 – If yellow must come out for the cone, the car that hit the cone will be charged with a yellow and must start at the tail.

- **5.1.7 - Work Area:**

- 5.1.7.1 - Designated work area will be announced when determined to be necessary. You may change a tire or complete other work under yellow flag only in designated work area if declared.
- 5.1.7.2 - A two-minute allowance will be given to lead lap cars only, ***while under a Yellow Flag*** once the car reaches the designated work area during "A" Main only. The two minutes will begin when the Pit Steward indicates that the car has reached their work area and will be kept by the On Track Race Director.
- 5.1.7.3 - When the one lap signal (white flag) is displayed, the car will not be allowed to return to track. Any car performing work including changing or removing a tire for any reason will start at the tail.
- 5.1.7.4 - Any work completed outside of the declared designated work area will result in disqualification from that event and the car will be scored last.
- 5.1.7.5 - When a work area is used, cars may fire from the work area ***using a track push truck only*** and re-enter the race track in turn three (3) without going to the small warm up track or stopping at the top of turn three (3).
- 5.1.7.6 – Cars that pull into the infield and stop will forfeit their work area time and will not be permitted to continue.

- **5.1.8 – Entering and Exiting the Pits**

- 5.1.8.1 - Cars going to the pit area may re-enter during any racing event during a caution period. Only during "A" Main will the 2 minute clock be used.
- *5.1.8.2 - The cars must stop and report to the official at the top (outside) of turn three and be pushed off from that location only when no work area is used.*
- *5.1.8.3 - Cars failing to be pushed off from the staging area at the top of turn three will be disqualified from further participation in that event.*

- **5.1.9 – Race Completion**

- A race is not considered complete until the checkered flag appears. If a yellow or red flag must be thrown after the checkered flag appears, the race is officially over and the posted pay-off will be made in the same manner as a yellow or red flag realignment. Any cars causing the yellow or red flag to be displayed will be put to the rear of the line-up of official finish as would appear for a restart.

- **5.1.10 – Official Distance**

- 5.1.10.1 – One lap over halfway through the “A” Main shall constitute a complete race in the event that a stoppage is required.
- 5.1.10.2 – If the race is stopped and ruled complete, the finishing positions will be paid in the same manner as yellow or red flag realignment. Any cars causing the stoppage will be put to the rear of the line-up of official finish as appears for a restart.
- 5.1.10.3 – In the event of weather causing the stoppage, the payoff will be made according to the last scored lap by the leader previous to the red flag.

6. Scoring:

- 6.1 - Timing and Scoring will be electronic via transponders (A.M.B. model TranX260) or Flex Transponders with human backup.
- 6.1.1 - Transponders are required and are available for purchase (AMB models or Flex) or rent ($15 per night) at the draw table when you register for competition for the evening.
- 6.1.2 - Rental units must be returned before pay will be released.
- 6.1.3 - Drivers who have their own unit must leave the unit code with the registrar for scoring purposes.
- 6.1.4 - Transponders must be mounted behind the frame diagonal located behind the front torque tubes and ahead of the front axle as indicated in the drawing below.

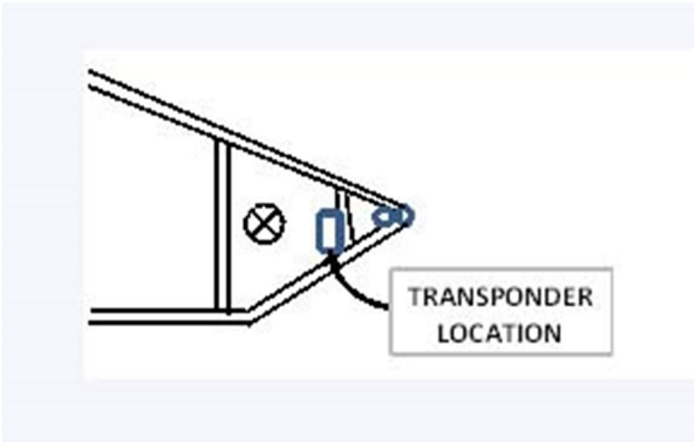

- 6.1.5 - The transponder must be located as close to the bottom frame rail as possible.
- 6.1.6 - Cars with Transponders found in locations other than that indicated above during post-race inspection will be penalized two (2) positions.
- 6.1.7 – Lap scoring will occur on the lead car. If the yellow or red flags appear, scoring will freeze and all cars that have crossed the start / finish line at that time will be lined up in that order for the restart. All other cars that have yet to cross the start / finish line will be lined up according to their order on the previously completed lap.

7. Rookie of the Year eligibility:

- 7.1 - “Rookie of the Year” candidates will be limited to drivers who have competed in a Sprint Car (360 or 410) car 5 times or less in any previous year. The rookie driver who finishes highest in total points will determine the “Rookie of the Year”.
- 7.2– Drivers new to sprint car racing (Not Raced Crate’s, 360’s, or 410’s) must start tail in their respective division in all races for the first three (3) weeks.

8. Cars not taking the initial heat race green flag:

- 8.1 - If a car did not take the initial green flag in a heat race, it will start last in a “B” Main. Cars will not be allowed to join the field if they miss the initial green.

9. Race Length:

- 9.1 - All Heats will be 8 laps. “B” Main(s) will be 8 laps; “A” Main will be 20 laps unless otherwise posted.
- 9.2 - Opening Night, Northern Summer Nationals & Season Championship “A” Main(s) will be 25 laps.

10. Starting Field:

- 10.1 - All “A” Main events will start 20 cars. Unless otherwise posted.

11. Scales:

- 11.1 - Any and all cars may be requested to report to the scales at any time. Failure to report when instructed will result in disqualification and being scored last in that event.

12. Registration:

- 12.1 - ALL Drivers and Owners MUST COMPLETE a Registration form before being allowed to compete (***whether they want to become a member or not***). A Track Membership ($60.00 until practice night. $100.00 after that night.) Is required to accumulate points toward the season championship. Season Passes are not Memberships. Points accumulated will be awarded to the driver.
  - 12.2 - Drivers may compete in more than one division in a night. But will only allowed to participate in one sprint car division per night. They must pay a pit gate admission price at the sign in window for any additional classes they wish to enter. Driver may buy a membership in additional divisions to utilize cheaper sign in. Driver may collect points in one division/night. They must declare which division when signing in.

13. Year End Point Fund Distribution:

- 13.1 - Will be awarded to the top ten drivers who have participated in 80% of all scheduled 360 events during the race season. To collect season end point fund, driver must be present at the season ending banquet.
- 13.2 **–** *(based on an 80% MUST participation by 10 cars)*

1	19%
2	13%
3	12%
4	11%
5	10%
6	9%
7	8%
8	7%
9	6%
10	5%

14. Championship Points:

- 14.1 - In case of postponement of program after completion of all heat races, show points will be awarded as earned.
- 14.2 – 75 show up points will be awarded for Patriot Sprint Group & Empire Super Sprint races.
- 14.3 - Championship points will be awarded to (**Members Only**).
- 14.4 - Championship points will be awarded per the following scale.

Ohsweken Speedway

B Main

1 – 0	5 – 0	9 – 20	13 – 20	17 – 20
2 – 0	6 – 20	10 – 20	14 – 20	18 – 20
3 – 0	7 – 20	11 – 20	15 – 20	19 – 20
4 – 0	8 – 20	12 – 20	16 – 20	20 – 20

A Main

1 – 70	5 – 57	9 – 49	13 – 41	17 – 33	
2 – 65	6 – 55	10 – 47	14 – 39	18 – 31	
3 – 61	7 – 53	11 – 45	15 – 37	19 – 29	
4 – 59	8 – 51	12 – 43	16 – 35	20 – 27	

15. Redraw and B-Main and Feature Line Up Procedures

- 15.1 – At the completion of the nightly heat races passing points will be calculated based on your starting position when the white flag is displayed.
- 15.2 – The top 8 in passing points (from top heat finishers) will become eligible for the A-Main redraw to take place at the tech barn at the discretion of the Pit Stewart.
- 15.3 – Ties is passing points will be broken by original nightly pill draw. The driver with lower nightly pill draw will be the winner of any tie.
- 15.4 – The driver with the most passing points will redraw first followed by the second highest, and so until the completion of the 8 car redraw.
- 15.5 – Any Driver who does not finish (DNF) or does not start (DNS) their respective heat will not be eligible for the redraw and will be placed in order based on passing points behind the cars who completed their heat race.

2017 Sprint Race Procedures

- Heat race line-ups to be determined by pill draw.
- As each number is drawn for a car, that number will be posted. This procedure will be repeated until a number has been drawn for each car that wishes to compete.

- The lowest number drawn will be placed on the pole of the first heat, the next lowest number on the pole of the second heat, etc. Once the pole positions are filled in each heat, the next lowest number goes to the outside of the front row of the first heat, etc.
- If there are an uneven number of cars to equally distribute between heats, the last cars will be placed at the back of the lowest numbered heats.
- The draw will close at 6:45 PM**.**
- Heat race line-ups will be posted by 6:55 PM.
- Cars must hot lap in heat race groups. **(No Exceptions)**
- Any cars not represented by a pill draw shall be placed at the rear of the heat race with the lowest number of cars.
- Passing points earned in the heat races will influence the starting positions for the balance of races scheduled that evening.

FORMAT FOR 30 CARS or LESS:

- Three (3) eight (8) lap heat races. Top five (5) finishers in each heat will advance to the "A" Main. Top 8 in passing points (from the 15 qualified cars) will redraw for positions 1 thru 8. Top passing point accumulator will draw first and so on until all 8 positions are filled.

- Positions 9 through 15 will be occupied by heat race passing point earners ranked 9 through 15 straight up.

- If there are over *20* cars a "B" Main will be required. They will line up straight up based on accumulated heat race passing points. The top five (5) finishers will transfer to the "A" Main. They will occupy positions 16 to 20 and line straight-up as per their finishing order from the "B".

- If less than 20 cars are present or remain in competition a "B" Main will not be required and the field will be completed after position 15 based on accumulated heat race passing points for the remaining cars.

FORMAT FOR 31 to 40 CARS:

- Four (4) eight (8) lap heat races. Top four (4) finishers in each heat will advance to the "A" Main. Top 8 in passing points (from the 16 qualified cars) will redraw for positions 1 thru 8. Top passing point accumulator will draw first and so on until all 8 positions are filled.

- Positions 9 through 16 will be occupied by heat race passing point earners ranked 9 through 16 straight up.
- If there are 31 or less cars a “B” Main will be required. They will line up straight up based on accumulated heat race passing points. The top four (4) finishers will transfer to the “A” Main. They will occupy positions. 17 to 20 and line up straight-up as per their finishing order from the “B”.

- If more than thirty-two (32) cars total sign in, there will be two (2) “B” Mains. They will line up alternating between the two “B” Mains based on accumulated heat race passing points. The driver placing nineteenth in heat race passing points will start on the pole of “B” Main #1 with the next highest getting the pole in “B” Main #2, etc. until all cars have been assigned a starting position.

- The top two (2) finishers in each “B” Main transfer to the “A” Main. The winner of “B” Main #1 will occupy position 17 in the “A” Main starting line-up while the winner of “B” Main #2 will line up in Position 18. Second in “B” Main #1 will start the “A” Main in position 19 while second in “B” Main #2 will line up in position 20.

FORMAT FOR OVER 41 CARS:

- Five (5) eight (8) lap heat races. Top three (3 finishers in each heat will advance to the “A” Main. Top 8 in passing points (from the 15 qualified cars) will redraw for positions 1 thru 8. Top passing point accumulator will draw first and so on until all 8 positions are filled.

- Positions 9 through 15 will be occupied by heat race passing point earners ranked 9 through 15 straight up.

- If more than thirty-two (32) cars total sign in, there will be two (2) “B” Mains. They will line up alternating between the two “B” Mains based on accumulated heat race passing points. The driver placing sixteenth (16th) in heat race passing points will start on the pole of “B” Main #1 with the next highest getting the pole in “B” Main #2, etc. until all cars have been assigned a starting position.

- The top two (2) finishers in each “B” Main transfer to the “A” Main. The winner of “B” Main #1 will occupy position 16 in the “A” Main starting line-up while the winner of “B” Main #2 will line up in Position 17. Second in “B” Main #1 will start the “A” Main in position 18 while second in “B” Main #2 will line up in position 19. Position 20 will be occupied by the highest Corr/Pak Season Point accumulator who has not qualified thru

the “B” Main. Driver must make all attempts to qualify, must take the checkered flag in the “B” Main, and must possess an Ohsweken Speedway paid membership.

Ohsweken Speedway

2017 360 Sprint Car

Official Car Specifications

1.0 – Engine

- **1.1 –** 360 cubic inches, plus 1% tolerance for a 363.6 maximum c.i. displacement.

2.0 – Block

- 2.1 – Steel blocks only. No aluminum blocks. No titanium in engines, excluding valves and valve retainers. There must be an inspection plug in the oil pan, either a #12AN fitting or a one-inch pipe plug, or the pan may be removed at any time for inspection.

3.0 – Fuel Injection

- 3.1 – 2-3/16 inches (2.187”) maximum inside stack diameter; at least 3” in length for those used in conjunction with Ford #27-223, Mopar #27-222, or Chevy #27-211 Brodix spec heads.
- 3.2 – Larger injectors may be used, but they must have 2-3/16” sleeves at least 3 inches in length installed above the butterflies. (Note: Due to manufacturing processes, some injector restrictor sleeves may be slightly larger and a tolerance of .005” will be allowed on no more than 3 stacks).
- 3.3 – No relief hole may be drilled above the butterfly on any injector.
- 3.4 – No throttle body, computer-controlled or plenum-type injectors allowed.
- 3.5 – Injection unit shall have one shaft operated butterfly per cylinder.
- 3.6 – The immediate area of the butterfly MUST BE ROUND.
- 3.7 – No slide or barrel type injectors will be allowed.
- 3.8 – No down-nozzle injectors may be used.
- 3.9 – Only one injector nozzle and one injector line per cylinder is allowed and it must be in the injector casting.

4.0 – Heads:

- 4.1 – Spec heads, part #27-211 (Chevy), #27-223 (Ford), and #27-222 (Mopar), with American Sprint Car Series (ASCS) stamp may not be altered in any way for performance enhancements.
- 4.2 – Intake opening no larger than original opening, except: intake port floors and sides may be ground or polished 3/4 of an inch or no further into port than the closest edge of the closest letter of the ASCS logo. During this polishing, the left side of the letter "A" is sometimes inadvertently brushed with the polish wheel. This is permissible as long as the letter is still intact. During polishing of inlet port, polish marks may go slightly further than the 3/4-inch mark.
- 4.3—Porting and polishing of intake ports is allowed with the following restrictions:

  4.3.1 – A) All ASCS logos must remain completely intact

  B) Pushrod area and intake openings must meet previous requirements and checking fixtures currently utilized by sanctioned ASCS tracks.

  C) Valve spring pockets may not be welded or altered in any way with the intent to relocate.

  4.3.2 – Intake port openings must match the following gaskets:

  A) ASCS Chevy Fel-Pro #1206 or equivalent
  B) Ford Fel-Pro #1262 or equivalent
  C) Mopar Fel-Pro #1213 or equivalent

- 4.4 – Intake port polishing will be allowed no more than 1-1/2 inches below the bottom of the original seat ring on the back side of the bowl area and no more than one inch on the short side.
- 4.5 – Polishing will be allowed in the combustion chamber area to avoid hot spot chaffing. Polishing will be allowed in exhaust ports, as long as the original "ASCS" logo is not affected or port shape is not altered substantially.
- 4.6 – Absolutely no intake or exhaust port relocation, raising, enlargement or reshaping of any type.
- 4.7 – Valve angle and placement may not be altered in any way on the ASCS spec head or on any other head.
- 4.8 – ASCS checking fixtures to check the above specifications and dimensions will be utilized.
- 4.9 – Any internally-repaired ASCS spec head must be re-certified by Brodix.

- 4.10 – Non-spec Chevrolet heads will be allowed, but must have an unaltered ASCS or Fel-Pro (#8E89208) intake restrictor gaskets installed.
    - 4.10.1 – Unaltered means absolutely no modifications to bolt holes or port sizing.
    - 4.10.2 – The ASCS restrictor gaskets must be installed right side up with the logo on top.
    - 4.10.3 – The 0.150 inch protrusion must extend fully across the roof line of both the intake port in both the manifold and cylinder head.
    - 4.10.4 – There shall be no streamlining or re-contouring of intake ports or injectors to reduce the effect of the restrictor gasket.
    - 4.10.5 – Non-spec heads must have stock bolt size (3/8”), location (no step studs) and remain within one degree of OEM angle specifications (must accept a stock intake manifold).
    - 4.10.6 – Restrictor gasket bolt holes may not be enlarged or relocated.
    - 4.10.7 – No Brodix #12 heads. No 18-degree heads. No canted-valve heads. No heads other than the original 23-degree valve angle heads.
    - 4.10.8 – A maximum of one-degree tolerance of original manufacturing of valve angle is allowed.
- 4.11 – Airflow Research 360 spec heads (part #1056) will be allowed with absolutely no altering of the ports. Clearance and polishing work in the combustion chamber is allowed, but no work may go beyond the valve seat.
- 4.12 – No All-Pro Heads Allowed.
- 4.13 – Penalty for altered spec head or altering gasket will be suspension (possibly for one calendar year), forfeiture of all points and monies won for that race, and a fine of not less than $500, payable to Ohsweken Speedway before reinstatement.
- 4.14 – Front intake manifold bolt and water outlet bolt must have 1/8” hole for tagging engines.
- 4.15 – Any V-8 U.S.-production engine may be used after the heads have been approved.
- 4.16 – No V-6 engines will be allowed.

5.0 – Weight

- 5.1 – Minimum 1475 lbs. weight (with driver; no fuel added) after the race.
- 5.2 – Zero tolerance.
- 5.3 – No bolt-on weights will be allowed.
- 5.4 – Tubing and nerf bars must be hollow.

- 5.5 – Cars not meeting minimum weight will be disqualified for that race, scored last, and start scratch in any further race that evening after meeting minimum weight.

6.0 – Brakes

- 6.1 – Steel, aluminum, or titanium brake rotors allowed.

7.0 – Chassis

- 7.1 – Any sprint chassis is allowed.
- 7.2 – The roll cage must be of a four-post design.
- 7.3 – No dirt champ cars.
- 7.4 – No elliptical tubing used on or as part of the main frame structure.
- 7.5 – No chassis/suspension cockpit-adjustable devices (excluding top wing slider) are allowed.

8.0 – Fuel Tank

- 8.1 – Fuel tank must have bladder or can use Fuel Safe Enduro Cell .
- 8.2 – Fuel tanks must be securely fastened.
- 8.3 – Any means of mounting the tank must meet the approval of the officials.
- 8.4 –Tank size used for qualifying must remain for all events.

9.0 – Wheels

- 9.1 – No dual wheels are allowed.
- 9.2 – No carbon fiber wheels.
- 9.3 – Maximum allowed width of 18 inches for right rear wheel.
- 9.4 – Maximum allowed width of 15 inches for left rear wheel.
- 9.5 - Mud covers must have a minimum of 3 Steel dzus buttons holding cover to wheel. No aluminum dzus buttons allowed. Minimum of 5 steel dzus buttons will be mandatory in 2018 and highly recommended in 2017.
- **10.0 – Carbon fibre**
- 10.1 – No carbon fibre parts allowed in the suspension or drive line.

11.0 – Mufflers

- 11.1 – Although MUFFLERS not required, use of a *Schoenfeld Muffler PN: #112535* is recommended.

12.0 – Driveline System

- 12.1 – All driveline systems must be properly installed, reinforced and/or covered. A driveline hoop or restraint is required. *A Torque Tube Tether and U-Joint scatter shield is Highly Recommended*.

13.0 – Wings:

(*TOP*)

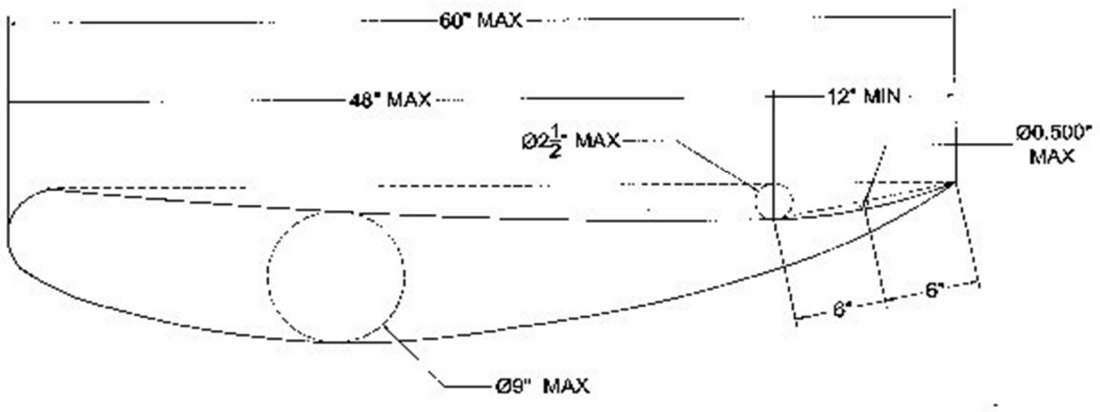

- 13.1 – Maximum top wing size of 25 square feet with 30-inch side panels. Maximum center foil width 60 inches covered with aluminium. Side boards must be mounted at 90 degrees to the centre foil. The deepest point allowed in the top surface of the wing will be 2-1/2 inches measured from top front of wing to the rear edge. The 12-inch section located at the rear of the Center Foil must not have the belly/curl arc out of proportion with the rest of the Center Foil. The belly/curl arc must span the entire length of the Center Foil and appear to be a gradual arc with the deepest point no further back than 48 inches from the leading edge. As measured on a 12-inch straight edge, the belly at 6 inches from the rear of the Foil may not be deeper than ½ inch. Top surface of the wing measuring crosswise must be flat. Center foil must be one piece. No split wings or bi-wings. No vent holes. Top wings must not extend beyond outside of rear tires. Core thickness not to exceed 9 inches.
- 13.2 – Top wing sideboards maximum size, 72 inches long and 30 inches tall. Panels must be of one-piece construction. Panels must be fabricated flat so as to have no turnouts or flaps exceeding 1.25 inches including reinforcement (reinforcement not to exceed 1.25 inches).

- 13.3 – NO turn-up (wicker bill) on 90 degree angle allowed at rear of center foil on dished wings. Flat top wings may utilize a 1” turn-up (wicker bill) on 90 degree angle at the back edge of the top wing.
- 13.4 – Two stationary rudders will be allowed to run under the entire length of the underneath portion of the top wing. Nowhere shall the rudder exceed 3 inches in height.
- 13.5 – No car will be allowed to compete without a top wing.

(*FRONT*)

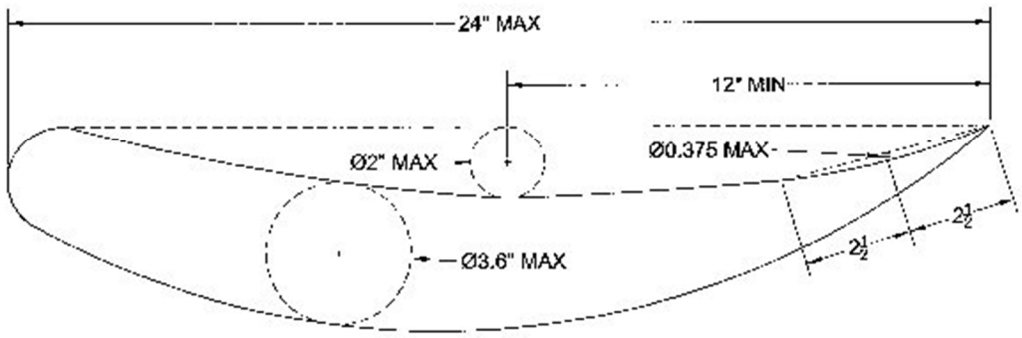

- 13.6 – Maximum front wing size to be 6 square feet total with a maximum width of 36 inches and 12-inch side panels. The belly/curl arc must span the entire length of the front foil and appear to be a gradual arc with the deepest point, no further back than 12 inches from the leading edge. The belly/curl arc must start at the front foil’s leading edge and shall not exceed a depth of 2 inches. The 5” section located at the rear of the front foil must not have a bell/curl arc that is out of proportion with the rest of the front foil. As measured on a 5-inch straight edge, the belly at 2 ½ inches from the rear of the foil may not be deeper than 3/8 inch. (This 3/8 inch measurement ensures that the belly/curl arc is gradual). Top surface from side to side must remain flat. Core thickness not to exceed 3.5 inches.
- 13.7 – Front wing side boards maximum size, 12 inches tall and 26 inches long with no more than one inch overhang from the center foil front edge to the side board front edge.
- 13.8 – The Front Wing must not extend beyond outside of front tires.
- 13.9 - Sideboards may have front, back, top, and bottom turnouts of no more than 1 inch.
- 13.10 – One-inch maximum turn-up (wicker bill) allowed on any front wing.
- 13.11 – No rudders on Front Wings.
- 13.12 – No moving parts allowed on or in foil structure.

- 13.13 – Front Wing may not be cockpit or driver adjustable while the car is stationary or in motion.

(*GENERAL*)

- 13.14 – Wings must be fabricated of metal alloys only. NO fibreglass, carbon fibre, or other similar material may be used.
- 13.15 – No body pieces to extend beyond or underneath front torsion tube except hood. No wedges or foils underneath race car. No pieces may be added to the frame so as to resemble, imitate or be specifically designed to deflect, trap or form a wind break of any nature, except those used to cool/protect the motor & braking system.
- 13.16 – Sunshields cannot restrict vision.
- 13.17 – Cockpit adjustable front-to-rear (hydraulic) sliders are allowed on Top Wing.
- 13.18 – No vent holes or louvers are allowed on any wing (or sideboard) surface.
- 13.19 – *Wing sideboards must be mounted at 90 degrees to the centre foil*.

14.0 – Front (Wing; Axle; Bumper) Locations

- 14.1 – Leading edge of Front Wing, Front Axle, and Front Bumper in relationship to location of from Torsion Tubes must be maintained.
- 14.2 – The leading edge of the front wing cannot be further than 20 inches forward of the leading edge of the front axle.
- 14.3 – The distance from the leading edge of the front bumper to the leading edge of the front torsion tube is a maximum of 8".
- 14.4 – The maximum distance from the leading edge of the front bumper to the leading edge of the front axle is 23 1/2 inches.
- 14.5 – The Front Wing leading edge must remain at least 1 inch behind the front edge of the front bumper.

15.0 – Bumpers

- 15.1 – All rear bumpers must be steel.
- 15.2 – Diameter must be a minimum of one inch. Minimum .065 thickness, and must be bolted in place (no pins, cotter keys, or pop rivets).
- 15.3 – Maximum distance from the leading edge of the front bumper to the leading edge of the front torsion tube is a maximum of 8”.
- 15.4 – The maximum distance from the leading edge of the front bumper to the leading edge of the front axle is 23-1/2”.

16.0 – Front axle

- 16.1 – Steel only. Minimum sizes: 2 inches by .156, 2-1/4 inches by .120, 2-3/8 inches by .095.

17.0 – Nerf bars

- 17.1 - Steel only. Nerf bars must be bolted in place (no pins, cotter keys, or pop rivets).

18.0 – Protective rock screen

- 18.1 - A protective rock screen must be installed in front of the driver with no larger than 2” x 2” square openings.

19.0 – Floor pan

- 19.1 - Steel or aluminum only.

20.0 – Tires

- 20.1 –Right Rear Hoosier 38230HTC 105/18 –HTC plated
  Left Rear tires 31169 92/15-RD12, 31189 94/15-RD12, 31209 96/15-RD12
  Front Tires 31131 D12 85/80 must be used for all Corr/Pak sanctioned sprint events. In the case of co-sanctioned events, the spec tires from the other sanctioning body(s) may be utilized.
  - 20.1.1 – Affiliating Sanctioning bodies spec tire rules will be in effect during special group events allowing any of the declared spec tires from the affiliating groups to be used by any competing team regardless of their affiliation.
  - 20.1.2 - Left Front is the only tire you can run flat.
- 20.2 – Tire softner will not be permitted.

21.0 – Fuel

- 21.1 – Methanol or ethanol fuel only.
- 21.2 –Top lube or fuel-coloring agents are discouraged but the only additives allowed; performance-enhancing fuel additives are not allowed.
- 21.3 – Suspected fuel will be tested at the team’s expense and moneys will be withheld until results are returned to Ohsweken Speedway.
- 21.4 – If fuel found to contain performance-enhancing additives, disqualification will result in forfeiture of all monies won.

22.0 – Numbers

- 22.1 – Numbers must be visible and neat in appearance.
- 22.2 – Numbers must be on both the left and right side of the tail, as well as the side panels and center foil of the top wing.
- 22.3 – Numbers must be at least 16 inches high, and letters at least 12 inches high, on the top wing.
- 22.4 – In the event of duplicate numbers, teams may be asked to temporarily add a unique letter to their number in all locations on the car.

23.0 – Car's equipment

- 23.1 – Use a securely fastened steering wheel with a quick disconnect and removable steering wheel.
- 23.2 – A tether is MANDATORY on the drag-link, attached to the frame.
- 23.3 – Steel drag links, tie rods, and Heim Ends on steering are highly recommended.
- 23.4 – No aluminum roll cages, front axles, frames, rear bumpers or nerf bars.
- 23.5 – All roll cages must be higher than the driver's helmet.
- 23.6 – Opening on left-hand side of cockpit must be a minimum of 14 inches.
- 23.7 – Opening on right-hand side of cockpit must be a minimum of 12 inches.
- 23.8 – No side foils, rudders, or panels are to extend beyond the roll cage on any side.
- 23.9 – No body pieces are to extend beyond or underneath the race car. A minimum wheel base of 83 inches or a maximum wheel base of 90 inches is allowed.
- 23.10 – No pop rivets or cotter keys to be used to fasten wings, bumpers or nerf bars to race car.
- 23.11 – No drilled or hollowed bolts in the car’s steering components.
- 23.12 – Only two valves and one spark plug per cylinder allowed.
- 23.13 – No titanium crankshafts or rods allowed.
- 23.14 – The sprint car cannot be raced without a hood.
- 23.15 – If a rear bumper is lost during a race, the car may continue until the car is stopped.
    - 23.15.1 – If a red flag situation occurs, the rear bumper must be replaced in the allotted time before it can be restarted.
- 23.16 – Metal fasteners are strongly suggested.

- 23.17 – A right-hand side head restraint system is recommended; it is also recommended for the left-hand side. In some cases, head nets may not be required if the seat restraint system is approved by track officials.
- 23.18 – Knee pads or other devices to keep the knees from banging around on objects and causing injuries are encouraged.
- 23.19 – Shoulder/helmet restraints are also encouraged.

24.0 – Roll Bar Padding:

- 24.1 – Roll cage MUST have protective padding.
- 24.2 – Roll bar padding MUST cover the upper part of the roll cage on both sides, and behind the drivers head.
- 24.3 – Roll bar padding must also be placed on any bars near the driver's head.
- 24.4 – A type of Styrofoam or fiberglass insulation of one-inch thick with an upholstery-type covering is suggested.
- 24.5 – If arm-a-fax or foam rubber is used, it should be considerably thicker.

25.0 – Driver seat:

- 25.1 - Driver's seat is required and must be securely fastened with a minimum of four bolts.
- 25.2 – A high back style seat is mandatory.
- 25.3 – A padded head rest is recommended.
- 25.4 – A fuel/fume deflector is recommended.
- 25.5 – Fuel/fume deflector should be wider than driver's seat and extend from floor pan underneath seat to turn-up behind seat.
- 25.6 – Safety harness and lap belts MUST be routed through the belt holes in the side and back of seat.

26.0 – Seatbelts

- 26.1 – Seatbelts should have the five- or six-point configuration of attachment to the frame or roll cage.
- 26.2 – The shoulder belts should be attached behind the seat to the frame or roll cage lower than the driver's shoulders.
- 26.3 – Belts must be no more than three years old.

27.0 – Driver's equipment

- 27.1 - Drivers are required to wear a proper fitting, SA 2010 or newer SNELL approved full face Helmet.

- 27.2 – A Flame Retardant drivers suit, Gloves, socks, underwear (unless 3 layer suit is utilized), and shoes are required.
- 27.3 – A head sock is also suggested. Helmets; Driver Suits; fastened seat belts, shoulder harness, anti-sub strap, and arm restraints are to be used anytime the car is started.
- 27.4 – A head and neck support or restraint system is mandatory. *(*Use of HANS or Neck Gen Device is highly recommended).
- 27.5 – Safety belts and arm restraints must be no more than three years old and contain unaltered SFI safety labels. Arm restraints built into drivers suit must be in good repair and subject to approval of technical director.
- **28.0 – Cockpit adjustments**
- 28.1 – Other than wing sliders, NO cockpit adjustable devices are allowed.
- 28.2 – This includes, but is not limited to brake bias, shocks, suspension, and fuel.
- 28.3 – No Wiring will be allowed inside the cockpit.
- 28.4 – All wiring to instruments must protrude from the engine compartment through the firewall and directly into the instrument. Ignition box may be mounted inside or outside of the firewall. Wiring pattern must be easily visible for technical inspection.

29.0 - Torsion Stop Retainers

- 29.1 -Torsion stop retainers will be mandatory on all four corners. The retainer may be of the rod-type with a securing cap or insert with an expanding mandrel and/or any other approved torsion stop retainer design. Torsion stop retainers must be installed and used in accordance with the manufacturer's instructions.

  The following torsion bar retainers have been approved for competition;

  a.) Moose Block 1200 Retainer Kit
  b.) All Star Performance All Star 10730 Retainer
  c.) Maring Safety Retainer
  d.) Butlerbuilt Mandrel
  e.) KKR grove and clip
  f.) Kaeding Clip
  g.) DMI – T-REX (Torsion Restraint Express System)
  h.) Schroeder Part number "BARS" (for Schroeder bars with relief in ends)
  i.) Schroeder Part Number: "RWLAR" (Wedge Lock)

- The approved Torsion Arm Stop may be revised from time-to-time with additional approvals and/or other changes to the approved list

30.0 – In-Car Communication

- 30.1 – No two way radios are allowed.
- 30.2 – RACECEIVER One way radios (ch; 454.000) are mandatory.
- 30.3 – No Mobile Devices allowed in cars during competition.

31.0 – Technical Inspection

- 31.1 - Post Race Technical Inspection carried out within the confines of the Tech Barn will be completed under the following guideline:
    - Cars to be inspected must proceed immediately to the Tech Inspection area after exiting the race track.
    - No team members are allowed to touch or remove any part of the race car without receiving prior approval of the Head Tech Official; (remember the area between the tech barn and the turn two exit is restricted)
    - Cars (with Driver) must enter the tech area as instructed by inspectors. Drivers must be move their race car onto scales or be assisted by track officials only if needed;
    - Access in the tech barn will be restricted to the car driver and two crew members. Each will be issued an inspection area pass (maximum 3 per car) that must be worn at all times while inspection is taking place and surrendered to the head tech inspector when inspection is complete;
    - The team is responsible for preparing only the area(s) of the race car for inspection as requested by the HEAD TECH OFFICIAL in a timely manner;

- 31.2 – Any participant (team) who refuses to allow tech officials to inspect their car at any time or follow inspection directions and procedures will be subject to the following:
    - Immediate disqualification from the event.
    - Loss of points and prize money for that event.
    - Credited with a feature win for handicapping purposes (*if applicable*).

- 31.3 – Participants found to be illegal and disqualified during technical inspection shall be subject to the following:
    - Disqualification from the event.
    - Loss of points and prize money for that event.

- 31.4 – A second infraction for deemed illegal or technical issues will result in the following:
    - Disqualification from the event.
    - Loss of points and prize money for that event.
    - TOTAL LOSS of ALL ACCUMULATED POINTS to DATE. (*Attendance record will not be affected for year-end perfect attendance award*)
- 31.5 – All new cars must arrive at the track one hour prior to start time and report to the tech inspector.
- 31.6 – If car does not meet our rules it will not be able to compete. *No exceptions*.
- 31.7 – All cars are subject to inspection by Ohsweken Speedway officials at any time and in any manner determined by track officials. All decisions regarding the timing and manner of the inspections, as well as which cars will be inspected, are final.
- 31.8 – Ohsweken Speedway reserves the right to confiscate any illegal components at any time as deemed necessary.
- 31.9 – Ohsweken Speedway reserves the right to impound any car for any reason at any time.

32.0 – Technology

- 32.1 – No traction control devices of any kind allowed.
- 32.2 – This includes mechanical and electronic traction control devices.
- 32.3 – No wheel speed sensors permitted.
- 32.4 – No microprocessor-operated or -controlled parts (such as fuel injections, fuel systems, etc.).
- 32.5 – Cars may be asked to disconnect tachometers at discretion of the technical committee.
- 32.6 – Ohsweken Speedway reserves the right to ask any team to forfeit their electronic ignition box for a replacement supplied by Ohsweken Speedway while competing.
- 32.7 – No electronic tire bleeders allowed.

33.0 – Series Sponsor Decal Placement:

- 33.1 – The Corr/Pak Sprint series decals must be displayed prominently on the outside of both top wing side panels in a highly visible place.

34.0 – Protest Rule

- 34.1 - Protest will be taken only from a driver or car owner and then only if the protest is in writing and accompanied by the appropriate protest fee in cash to

Ohsweken Speedway officials. In the event the protested car is found to be legal, the protest fee shall be given to the owner of the car protested minus a fee that shall be paid to the inspector.

- 34.2 - All protest must be filed within ten (10) minutes after the completion of the last race of the evening. All protest shall be decided upon by Ohsweken Race Director or his representative. Any appeal of official decision must be filed in writing within ten (10) minutes of notification with Ohsweken Speedway and forwarded to the Ohsweken Speedway Officials whose decision shall be final.
- 34.3 - No protests will be accepted on judgment decisions.
- 34.4 - In the event a car is protested and found to be illegal by the inspector, the driver and car protested shall have all points and money forfeited that were won during the particular race program in question and may be suspended.

Protest Fees (Figures In Brackets Are Filing Fees)

1. Motor tear down (heads off) and cylinders inspected: $1000 ($100).
2. P & G fuel test $1000 ($100).
3. Other technical protest: $400 ($100).

If any questions please contact Mike Miller, Tech Director Ohsweken Speedway
ohswekentech@gmail.com